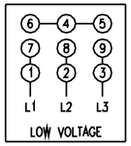

#1

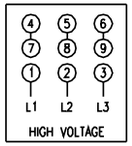

#2

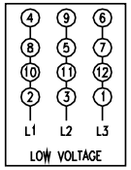

#3

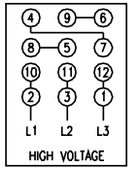

#4

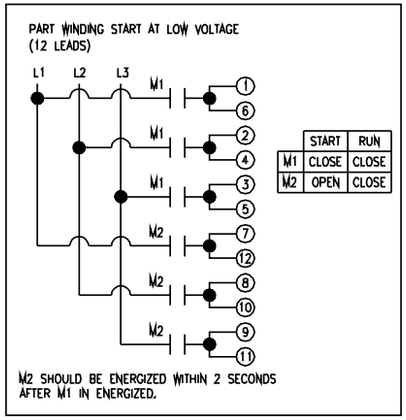

#5

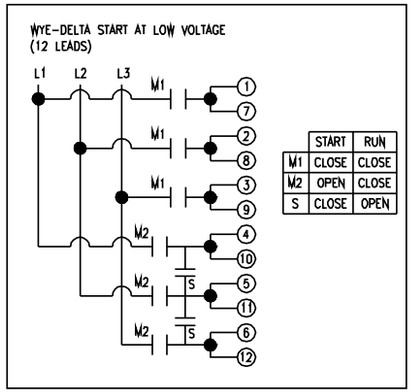

#6

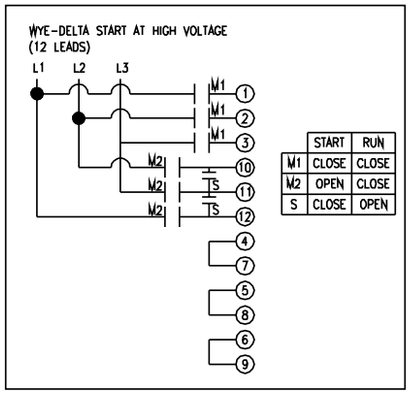

#7

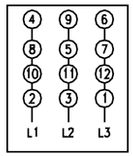

#8

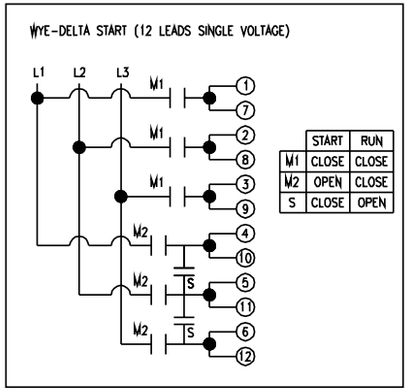

#9

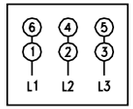

#10

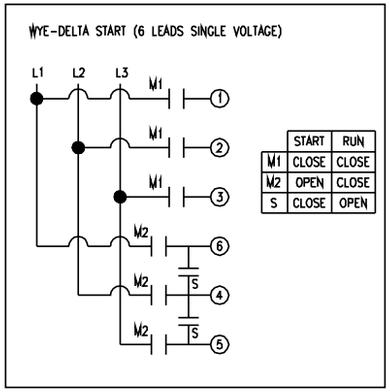

#11

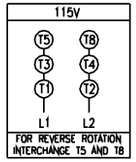

#12

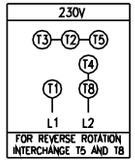

#13

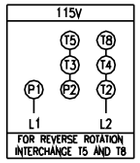

#14

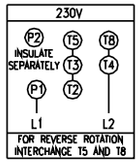

#15